Universal Tool

UT8663
UT8664
Aero Riveting Hammer

General Safety Information & Replacement Parts

TABLE OF CONTENTS

General Safety Information 2
Air Compressor and Air Tool Safety 2-3
Tool Specifications 3
Installation 4
Maintenance / Lubrication 4
Operation 5
Troubleshooting 6
Warranty 6
Service Parts 7

WARNING: This product contains lead, a chemical known to the State of California to cause cancer and birth defects or other reproductive harm. **Wash hands after handling.**

WARNING: This product contains chemicals known to the State of California to cause cancer and birth defects or other reproductive harm. **Wash hands after handling.**

WARNING: Risk of injury to persons. Read and understand operation instructions. Always become familiar with all the instructions and warnings before operating any pneumatic tool.

7.2.2.3 GENERAL SAFETY RULES

- Multiple hazards. Read and understand the safety instructions before installing, operating, repairing, maintaining, changing accessories on, or working near the power tool. Failure to do so can result in serious bodily injury.
- Only qualified and trained operators should install, adjust or use the power tool.
- Do not modify this power tool. Modifications may reduce the effectiveness of safety measures and increase the risks to the operator.
- Do not discard the safety instructions – give them to the operator.
- Do not use a tool if the tool has been damaged.
- Warnings shall be given against the risk of explosion or fire due to the material being processed;
- Warnings shall be given against the risk of cutting.

7.2.2.4 PROJECTILE HAZARDS

- Failure of the work piece, of accessories, or even of the tool itself may generate high velocity projectiles.
- Always wear impact-resistant eye protection during operation of the tool. The grade of protection required should be assessed for each use.

7.2.2.5 ENTANGLEMENT HAZARDS

- Entanglement hazard - choking, scalping and/or lacerations can occur if neck ware, hair or gloves are not kept away from tool and accessories.

7.2.2.6 OPERATING HAZARDS

- Use of the tool may expose the operator's hands to hazards including crushing, impacts, cuts and abrasions and heat. Wear suitable gloves to protect hands.
- Operators and maintenance personnel must be physically able to handle the bulk, weight and power of the tool.
- Hold the tool correctly: be ready to counteract normal or sudden movements – have both hands available.
- Maintain a balanced body position and secure footing.
- Keep hands away from rotating or reciprocation accessories, spindles or other moving parts.
- Release the start and stop device in the case of an interruption of the energy supply
- Use only lubricants recommended by the manufacturer.

7.2.2.7 REPETITIVE MOTIONS HAZARDS

- When using a power tool, you may experience discomfort in your hands, arms, shoulders, neck, or other parts of your body.
- While using a power tool, position your body in a comfortable posture. Maintain secure footing and avoid awkward or off-balanced postures. Changing your posture during extended tasks may help avoid discomfort and fatigue.
- If you experience symptoms such as persistent or recurring discomfort, pain, throbbing, aching, tingling, numbness, burning sensation, or stiffness, do not ignore these warning signs. Promptly tell your employer and consult a qualified health professional.

7.2.2.8 ACCESSORY HAZARDS

- Only use sizes and types of accessories and consumables that are recommended by the power tool manufacturer.

7.2.2.9 WORKPLACE HAZARDS

- Slips, trips and falls are major causes of workplace injury. Be aware of slippery surfaces caused by use of the tool and also of trip hazards caused by the air line or hydraulic hose.
- Proceed with care in unfamiliar surroundings. Hidden hazards may exist, such as electricity or other utility lines.
- This power tool is not intended for use in potentially explosive atmospheres and is not insulated from coming into contact with electric power.
- Make sure there are no electrical cables, gas pipes etc. that could cause a hazard if damaged by use of the tool.

7.2.2.10 DUST AND FUME HAZARDS

- Dust from some work processes can cause cancer, birth defects or other respiratory diseases. Risk assessment of these hazards and implementation of appropriate controls is essential.
- If the pneumatic tool is used in a dust filled environment exhaust air can cause a dust hazard
- Dusts and fumes generated when using power tools can cause ill health (for example: cancer, birth defects, asthma and/or dermatitis); risk assessment of these hazards and implementation of appropriate controls of is essential.
- Risk assessment should include dust created by the use of the tool and the potential for disturbing existing dust.
- Operate and maintain the power tool as recommended in these instructions, to minimize dust or fume emissions
- Direct the exhaust so as to minimized disturbance of dust in a dust filled environment
- Where dusts or fumes are created, the priority shall be to control them at the point of emission.
- All integral features or accessories for the collection, extraction or suppression of airborne dust or fumes should be correctly used and maintained in accordance with the manufacturer's instructions.
- Select, maintain and replace the consumable/inserted tool as recommended in these instructions, to prevent an unnecessary increase in dust or fumes
- Use respiratory protection as instructed by your employer or as required by occupational health and safety regulations;

7.2.2.11 NOISE HAZARDS

Unprotected exposure to high noise levels can cause permanent, disabling, hearing loss and other problems such as tinnitus (ringing, buzzing, whistling or humming in the ears);
Risk assessment of these hazards and implementation of appropriate controls of is essential.

- Appropriate controls to reduce the risk may include actions such as damping materials to prevent work pieces from 'ringing'
- Use hearing protection as instructed by your employer or as required by occupational health and safety regulations;
- Operate and maintain the power tool as recommended in these instructions, to prevent an unnecessary increase in noise levels;
- Select, maintain and replace the consumable/inserted tool as recommended in these instructions, to prevent an unnecessary increase in noise.

7.2.2.12 VIBRATION HAZARDS

Exposure to vibration can cause disabling damage to the nerves and blood supply of the hands and arms;
Wear warm clothing when working in cold conditions and keep your hands warm and dry;

- If you experience numbness, tingling, pain or whitening of the skin in your fingers or hands, stop using the power tool, and tell your employer. You should also seek medical advice from a qualified occupational health professional.
- Operate and maintain the power tool as recommended in these instructions, to prevent an unnecessary increase in vibration;
- Select, maintain and replace the consumable/inserted tool as recommended in these instructions, to prevent an unnecessary increase in vibration levels;
- Support the weight of the tool in a stand, tensioner or balancer, because the operator can then use a lighter grip to support the tool.
- Hold the tool with a light but safe grip taking account of the required hand reaction forces, because the risk from vibration is generally greater when the grip force is higher.

7.2.3 ADDITIONAL SAFETY INSTRUCTIONS FOR PNEUMATIC POWER TOOLS - AIR SUPPLY & CONNECTION HAZARDS

- Air under pressure can cause severe injury.
- Always shut off air supply, drain hose of air pressure and disconnect tool from air supply when not in use, before changing accessories or when making repairs.
- Never direct air at yourself or anyone else.
- Whipping hoses can cause severe injury. Always check for damaged or loose hoses and fittings.
- Whenever universal twist couplings (claw couplings) are used, lock pins must be installed.
- Do not exceed the maximum air pressure stated on the tool.
- Use whip check safety cables to safeguard against possible hose to tool and hose to hose connection failure.
- Never carry an air tool by the hose.

Safety Information (continued)

AIR COMPRESSOR AND AIR TOOL SAFETY

1. Risk of Bursting. Do not adjust the regulator to result in output pressure greater than the marked maximum pressure of this air tool.
2. Ensure the hose is free of obstructions or snags. Entangled or snarled hoses can cause loss of balance or footing and may become damaged.
3. Never leave a tool unattended with the air hose attached.
4. Do not operate this tool if it does not contain a legible warning label.
5. Do not continue to use a tool or hose that leaks air or does not function properly.
6. Never direct a jet of compressed air toward people or animals.
7. Protect your lungs. Wear a face or dust mask if the operation is dusty.

WARNING: Some dust created by power sanding, sawing, grinding, drilling and other construction activities contains chemicals known to cause cancer, birth defects or other reproductive harm. Some examples of these chemicals are:

Lead from lead based paint, crystalline silica from bricks and cement and other masonry products, arsenic and chromium from chemically-treated lumber.

Your risk from those exposures varies, depending on how often you do this type of work. To reduce your exposure to these chemicals: work in a well-ventilated area, and work with approved safety equipment, such as dust masks that are specifically designed to filter out microscopic particles.

Important Warnings Non-Rotary Percussive Power Tool

1. **Accessory Hazards**
2. Disconnect the non-rotary percussive power tool from the energy supply before changing the inserted tool or accessory.
3. Use only sizes and types of accessories and consumables that are recommended by the non-rotary percussive power tool manufacturer; do not use other types of sizes of accessories and consumables.
4. For hammers, where appropriate, never use any chisel as hand struck tool. They are specifically designed and heat treated for use only in non-rotary percussive power tools.
5. For hammers and breakers, where appropriate, never use blunt chisels, as they require excessive pressure and can break from failure. Blunt tool-pieces can increase vibration and, therefore, sharp tools should always be used.
6. Avoid direct contact with the inserted tool during and after use, as it can be hot or sharp.
7. Never adjust the non rotary percussive tool, or change the accessory, backing pad, unless the air supply and air hose is disconnected from the tool.
8. Always ensure that you are aware of the direction of the material chips and fragments being created by the tools operation and ensure that the material chips and fragments are not directed to the operator or other persons in the area.
9. Eye protection, hearing protection, safety gloves and safety aprons must always we worn when operating a non rotary percussive tool.
10. Only personnel trained in the correct methods to change accessories and accessory retainers should conduct these operations.
11. Never operate the non rotary percussive tool unless the accessory retainer supplied by the non rotary percussive tool manufacturer is correctly fitted.

Specifications

Vibration Level (m/sec2): 21.25 Noise Level (dBA): 95.7

Model	Retainer	BPM	Bore (in.)	Stroke (in.)	Bushing (in.)	Weight (lb.)	Weight (Kg)	Length (in.)	Length (mm)	Rec. Pressure	Air Inlet (NPT)	Rec. Hose (I.D. in)	Air Cons (cfm)	Av. Air Cons (cfm)
UT8663	Spring	2,160	1/2	2-7/8"	0.401"	3.0	1.2	6.7	170	90 psi-6.2 bar	1/4"	3/8"	28	7.8
UT8664	Spring	1,740	1/2	3-1/16"	0.401"	3.1	1.4	8.9	227	90 psi-6.2 bar	1/4"	3/8"	28	7.8

Installation

1 Cleaning the air hose

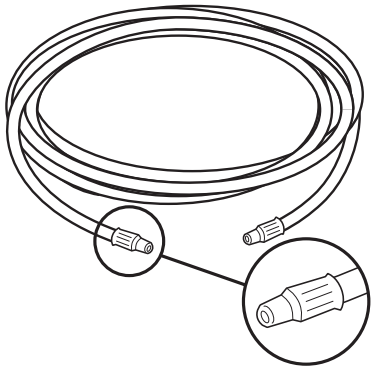

- ☐ A 3/8" air hose is required, with a maximum length of 25 ft.
- ☐ Clean the air hose of accumulated dust and moisture before connecting it to the air supply.

NOTE: If a longer air hose is required, connect a 1/2" air hose to the 3/8" air hose to ensure the hammer has the necessary air supply.

Recommended Air Line Set-Up	
Part	**Description**
A	Air Tool
B	Quick Plug
C	Quick Coupler
D	Air Hose
E	In-line Regulator
F	In-line Lubricator
G	In-line Filter
H	Air Compressor

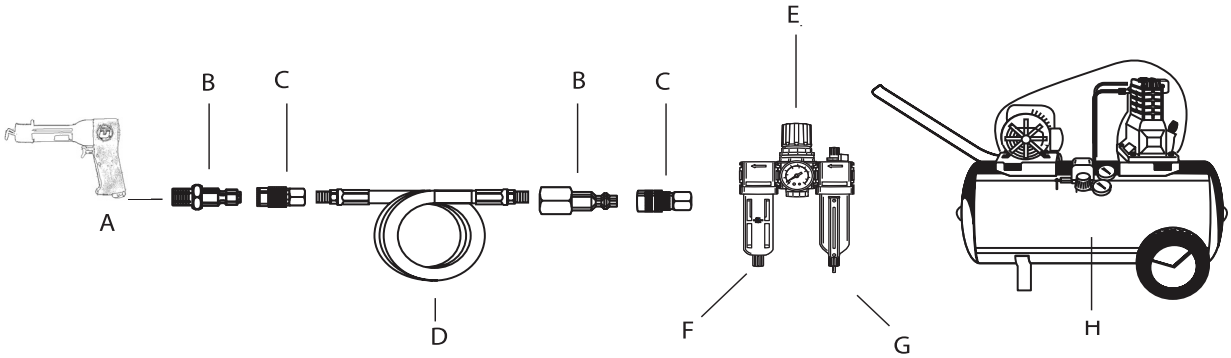

Maintenance

Ensure the air line is shut-off and drained of air before removing this tool for service or changing sockets. This will prevent the tool from operating if the throttle is accidentally engaged.

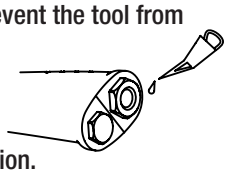

LUBRICATION

- ☐ An in-line filter-regulator-lubricator is recommended as it increases tool life and keeps the tool in sustained operation.
- ☐ Regularly check and fill the in-line lubricator with air tool oil. Avoid using excessive amounts of oil.
- ☐ Adjust the in-line lubricator by placing a sheet of paper next to the tool's exhaust ports and holding the throttle open approximately 30 seconds. The lubricator is properly set when a light stain of oil collects on the paper.
- ☐ If it is necessary to store the tool for an extended period of time (overnight, weekend, etc.), generously lubricate the tool through the air inlet. Run the tool for approximately 30 seconds to ensure the oil is evenly distributed throughout the tool. Store the tool in a clean and dry environment.
- ☐ Recommended lubricants: Air tool oil or any other high grade turbine oil containing moisture absorbent, rust inhibitors, metal wetting agents, and an EP (extreme pressure) additive.

Operation

1 Operating the hammer

- This Hammer is designed to operate on 90 PSIG. Lower pressure (below 90 PSIG) will reduce performance of the tool. Higher air pressure (over 90 PSIG) raises the performance of the tool beyond its rated capacity and could cause serious damage to the tool and the user.

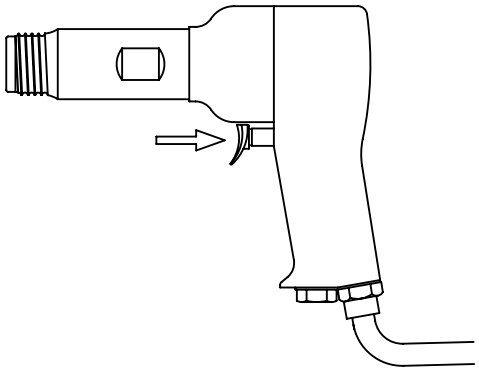

2 Installing the chisel

WARNING: Disconnect the tool from the air supply before servicing or changing accessories.

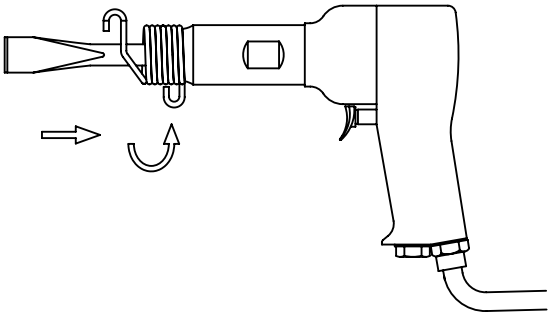

- To insert the chisel, press the loop on the retainer spring to the side and push the chisel into the cylinder of the air hammer. Release the loop.
- Ensure the chisel is properly held by the retainer spring before use.

3 Removing the chisel

- Rotate the spring counterclockwise to remove the retainer spring.
- Pull the chisel out of the air hammer.

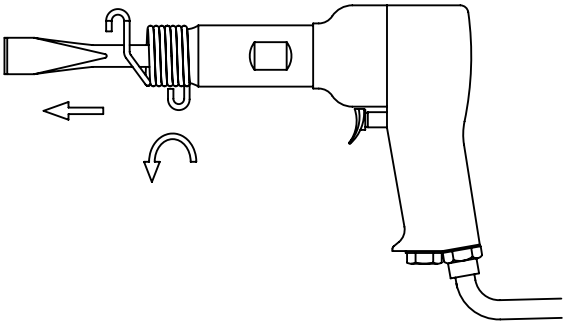

WARNING: Do not operate the tool without the chisel in cylinder or allow the chisel to be driven out of the cylinder. Internal damage will result if the piston strikes the cylinder wall.

4 Operating the air hammer

- Place the cutting edge of the chisel against the work piece and then press the trigger.
- Do not operate percussion tools unless chisel or rivet set is against the work piece.

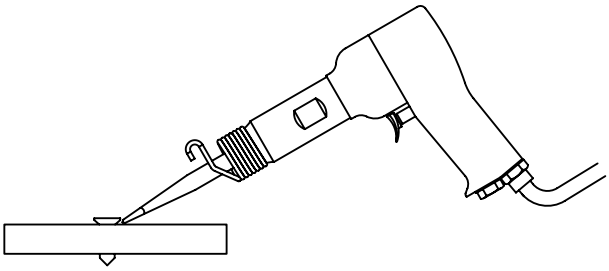

Troubleshooting

Problem	Possible Cause	Solution
The tool runs slowly or will not operate.	There is grit or gum in the tool.	Flush the tool with air tool oil or gum solvent.
	The tool is out of oil.	Lubricate the tool according to the lubrication instructions in this manual.
	The air pressure is low.	□ Adjust the regulator on the tool to the maximum setting. □ Adjust the compressor regulator to the tool's maximum setting of 90 psi.
	The air hose leaks.	Tighten and seal the hose fittings with pipe thread tape if leaks are found.
	The air pressure drops.	□ Ensure the hose is the proper size. Long hoses or tools using large volumes of air may require a hose with an I.D. of ½" or larger depending on the total length of the hose. □ Do not use a multiple number of hoses connected together with a quick connect fitting. This causes additional pressure drops and reduces the tool power. Directly connect the hoses together.
There is moisture blowing out of the tool's exhaust.	There is water in the tank.	Drain the tank. (See the air compressor manual for instructions.) Lubricate the tool and run it until water is not evident. Lubricate the tool again and run for 1-2 seconds.

Warranty

Limited Warranty: Universal Tool warrants its tools to be free from defects in material and workmanship for one year from the date of purchase. This warranty does not apply to tools which have been abused, misused, modified or repaired by someone other than Universal Tool or its authorized service centers. If a UT tool proves defective in material or workmanship within one year after purchase, return it to any authorized service center or Universal Tool freight prepaid. Please enclose your name, address and adequate proof of date of purchase and a short description of the defect. Universal Tool will,at its option, repair or replace defective tools free of charge. Repairs or replacements are warranted as described above for the remainder of the original warranty period. Universal Tool's sole liability and your exclusive remedy under this warranty is limited to repair or replacement of the defective tool.

There are no other warranties expressed or implied and Universal Tool shall not be liable for incidental, consequential or special damages, or any other damages,costs or expenses excepting only the cost or expense of repair or replacement as described above.

Universal Tool, a Brand of Continental Tool Group, Inc.
1660 Silver Beach Road Suite 100, Lake Park, FL 33403

Service Parts / Exploded View Drawing

Ref #	Part #	Description	Q'ty
1	9132101	Handle - Aluminum	1
2	9132602	Throttle Valve Tube	1
5	9132603	Valve Stem	1
6*	9OR0408	O-Ring	1
7	9132607	Throttle Valve Spring	1
8	9182808	Throttle Valve Plug	1
10	9132201	Air Inlet Bushing	1
12	9132605	Throttle Lever Link	1
13	9SP4020	Throttle Lever Pin	1
13-1	9SP0416	Throttle Lever Pin	1
14	9132601	Throttle Push Button	1
31	9132301	Valve Seat	1
32	9132302	Valve	1
33	9132303	Valve Box	1
34	9132304	Dowel Pin - Valve Box	1
35	9133402	Pistor(3X)	1
36	9133401	Cylinder(3X)	1
37	9132403	Round Bushing	1
38	9132103	Lock Pin - Cylinder & Handle	1
39	9132102	Exhaust Deflector	1
42*	9192902	Retainer Spring	1

UT8663

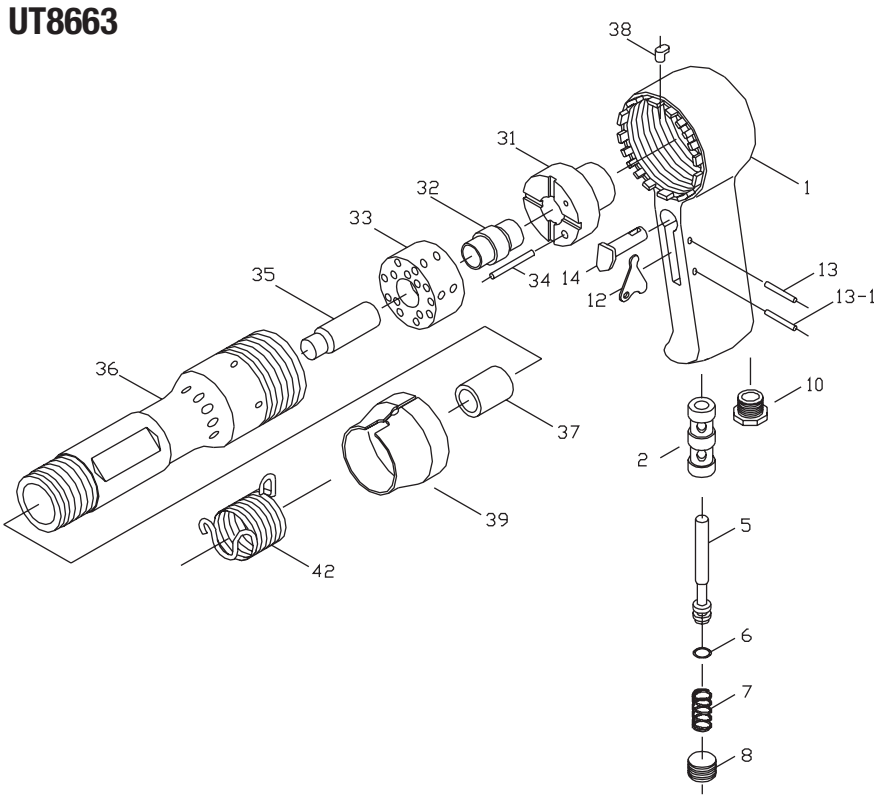

Ref #	Part #	Description	Q'ty
1	9132101	Handle - Aluminum	1
2	9132602	Throttle Valve Tube	1
5	9132603	Valve Stem	1
6*	9OR0408	O-Ring	1
7	9132607	Throttle Valve Spring	1
8	9182808	Throttle Valve Plug	1
10	9132201	Air Inlet Bushing	1
12	9132605	Throttle Lever Link	1
13	9SP4020	Throttle Lever Pin	1
13-1	9SP0416	Throttle Lever Pin	1
14	9132601	Throttle Push Button	1
31	9132301	Valve Seat	1
32	9132302	Valve	1
33	9132303	Valve Box	1
34	9132304	Dowel Pin - Valve Box	1
35	9134402	Pistor(4X)	1
36	9134401	Cylinder(4X)	1
37	9132403	Round Bushing	1
38	9132103	Lock Pin - Cylinder & Handle	1
39	9132102	Exhaust Deflector	1
42*	9192902	Retainer Spring	1

UT8664

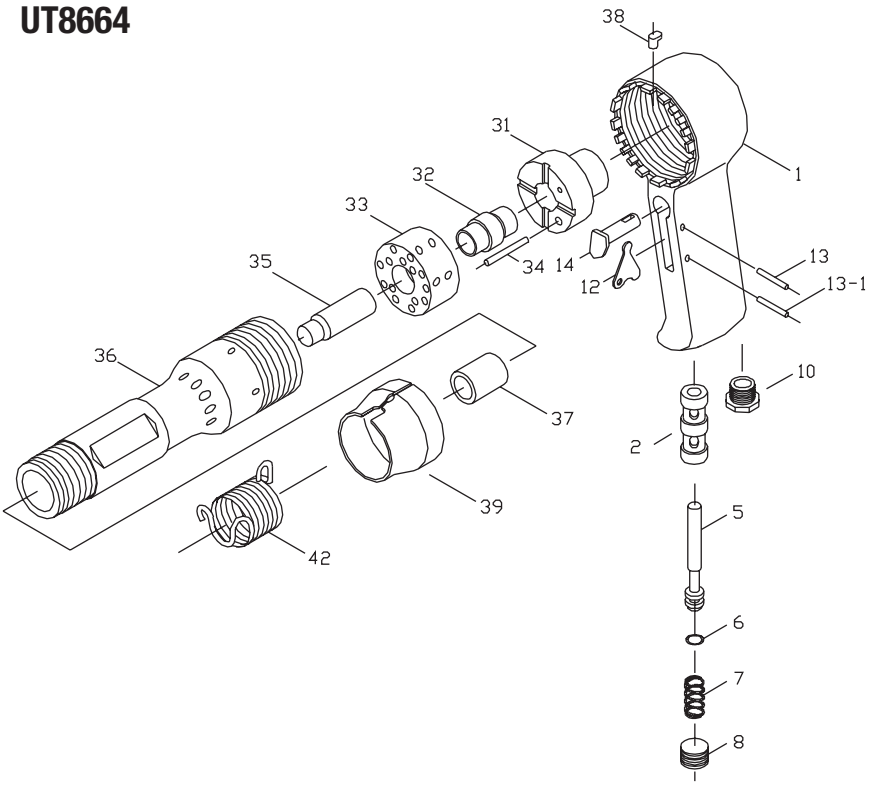

Universal Tool™

Questions, problems, missing parts?

Call Customer Service
8 a.m.-5 p.m., EST, Monday-Friday

1-800-356-3392

CONTINENTALTOOLGROUP.COM

Retain this manual for future use.

Universal Tool, a Brand of Continental Tool Group, Inc.
1660 Silver Beach Road Suite 100, Lake Park, FL 33403

CONTINENTAL TOOL GROUP